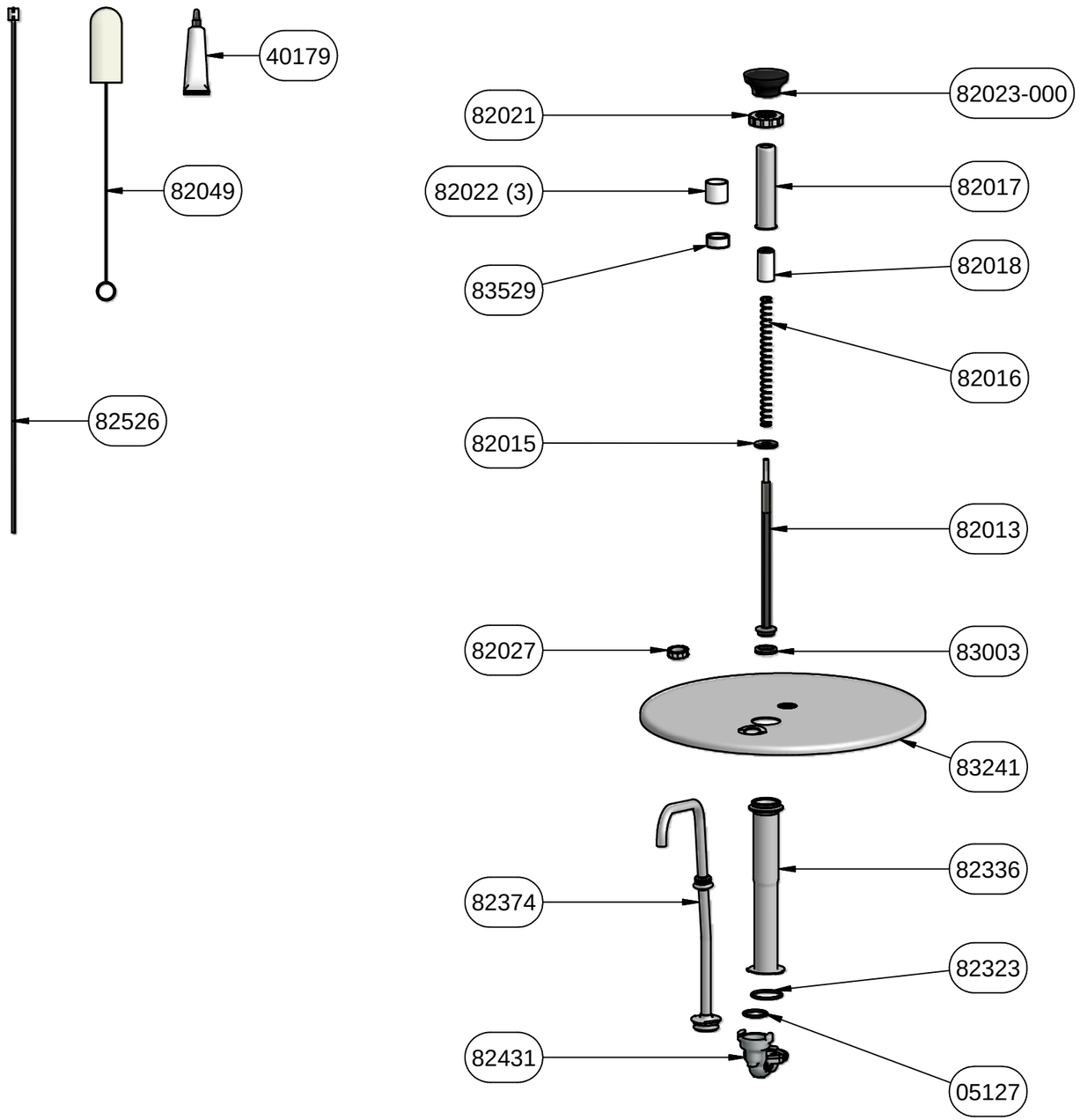

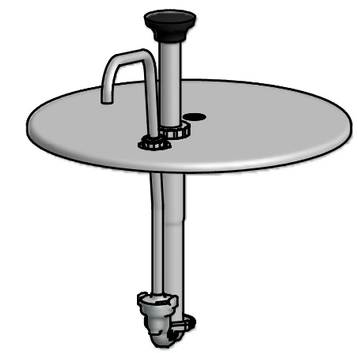

APPD BY		MATERIAL:	
CKD BY		TOLERANCES UNLESS OTHERWISE SPECIFIED FRAC ±1/64 DEC .00=±.01 .000=±.005 ANG ±1°	JA #
DRAWN BY DCK		**Server Products, Inc** RICHFIELD, WI 53076 USA 800-558-8722	
DATE 07/21/93		PART NAME CONDIMENT PUMP CP-10 1/2	SIZE B / DWG NO. 83240
SCALE FULL			